MAX-46VX-DF
(15392)

TYPE 40A
(25581000)

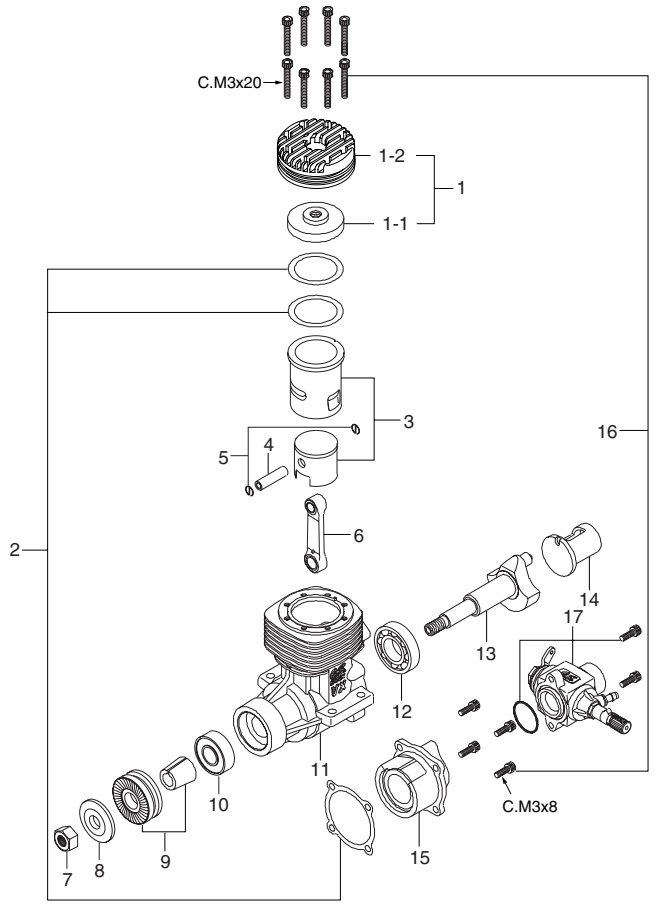

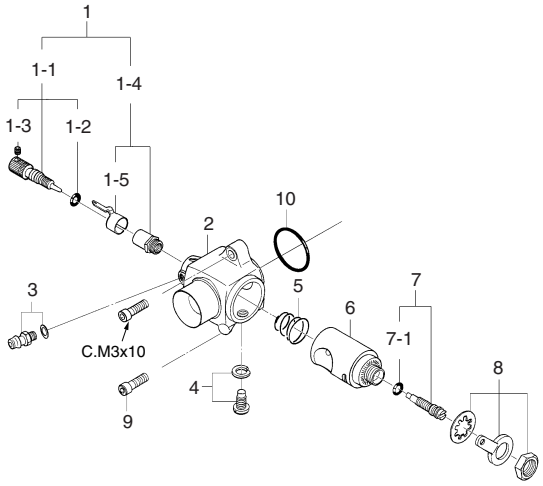

*Type of screw
C...Cap Screw M...Oval Fillister-Head Screw
F...Flat Head Screw N...Round Head Screw S...Set Screw

No.	Code No.	Description
1	25504000	Cylinder Head Assembly
1-1	25541100	Cylinder Head A
1-2	25504010	Cylinder Head B
2	25514000	Gasket Set
3	25503000	Cylinder & Piston Assembly
4	25306019	Piston Pin
5	24517000	Piston Pin Retainer (2pcs.)
6	25505000	Connecting Rod
7	23210007	Propeller Nut
8	23209003	Propeller Washer
9	25358019	Drive Hub
10	24530000	Crankshaft Ball Bearing (Front)
11	25501000	Crankcase
12	27330010	Crankshaft Ball Bearing (Rear)
13	25502000	Crankshaft
14	25516000	Rear Drum
15	25501800	Rear Housing
16	25513000	Screw Set
17	25581000	Carburetor Complete (Type 40A)
	25326130	Exhaust Header (404)

No.	Code No.	Description
1	25581900	Needle Valve Assembly
1-1	22681980	Needle Assembly
1-2	24981837	"O" Ring (2pcs.)
1-3	26381501	Set Screw
1-4	27381940	Needle Valve Holder Assembly
1-5	26711305	Ratchet Spring
2	25581100	Carburetor Body
3	22681953	Fuel Inlet (No.1)
4	25581220	Rotor Guide Screw
5	28281500	Rotor Spring
6	25581200	Carburetor Rotor
7	28281300	Mixture Control Screw Assembly
7-1	27881820	"O" Ring (2pcs.)
8	28281400	Throttle Lever Assembly
9	25581700	Carburetor Retaining Screw
10	25515000	Carburetor Rubber Gasket

O.S. GENUINE PARTS & ACCESSORIES

Code No.	Description
72200080	Needle Valve Extension Cable Set
28282300	Needle Control Lever
71531000	Non-Bubble Weight
72403050	Super Filter (L)
79870040	M4 Blind Nut (10pcs.)
55500003	M4 Lock Washer (10sets.)
71521000	Long Socket Wrench With Plug Grip

The specifications are subject to alteration for improvement without notice.