O.S. SPEED
RACING PERFORMANCE PARTS

# O.S. SPEED 21XZ-B

(12186)

## TYPE 21J2(B)

(22481002)

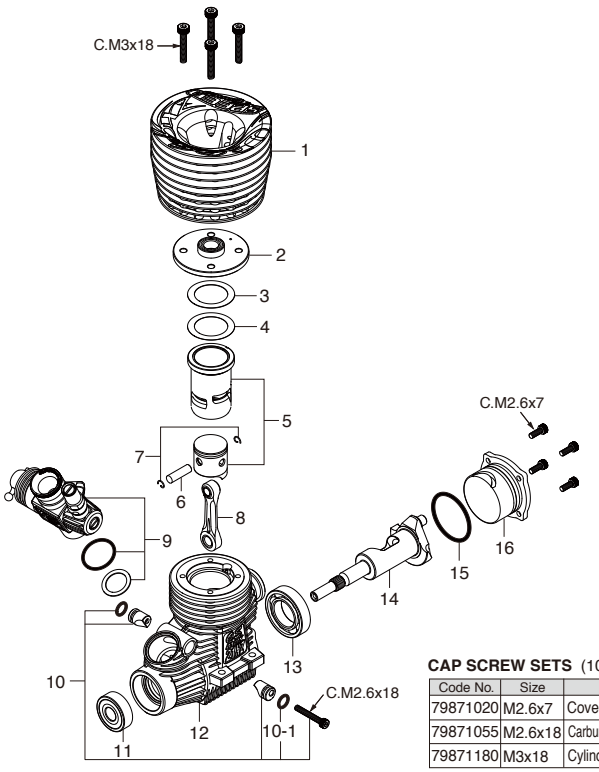


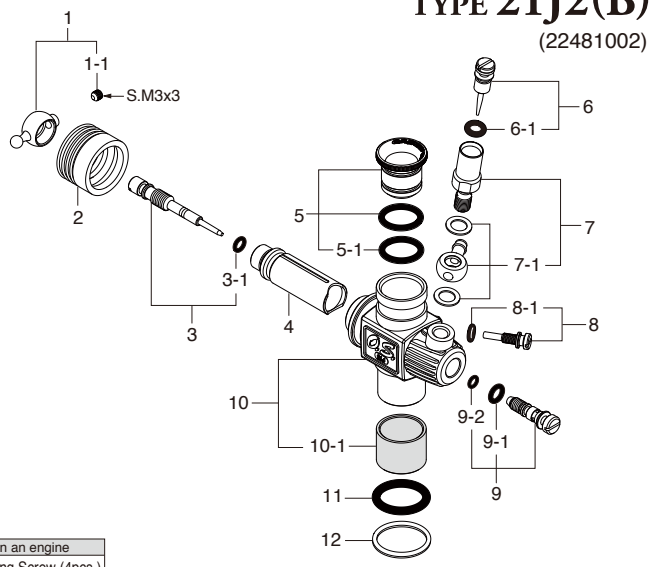


**CAP SCREW SETS** (10pcs./sets)

| Code No. | Size | Pcs. used in an engine |
|---|---|---|
| 79871020 | M2.6x7 | Cover Plate Retaining Screw (4pcs.) |
| 79871055 | M2.6x18 | Carburetor Retainer Retaining Screw (1pc.) |
| 79871180 | M3x18 | Cylinder Head Retaining Screw (4pcs.) |

* Type of screw
C...Cap Screw M...Oval Fillister-Head Screw
F...Flat Head Screw N...Round Head Screw S...Set Screw

| | No. | Code No. | Description |
|---|---|---|---|
| * | 1 | 22424000 | Outer Head |
| * | 2 | 22424100 | Inner Head |
| | 3 | 22014160 | Head Gasket (0.2mm) |
| | 4 | 22014170 | Head Gasket (0.1mm) |
| * | 5 | 22423000 | Cylinder & Piston Assembly |
| | 6 | 22016000 | Piston Pin |
| | 7 | 21817000 | Piston Pin Retainer (2pcs.) |
| | 8 | 23755020 | Connecting Rod |
| * | 9 | 22481002 | Carburetor Complete (Type 21J2(B)) |
| | 10 | 23981740 | Carburetor Retainer Assembly |
| | 10-1 | 24881824 | "O" Ring (2pcs.) |
| | 11 | 23731020 | Crankshaft Ball Bearing (Front) |
| * | 12 | 22421000 | Crankcase |
| | 13 | 23730050 | Crankshaft Ball Bearing (Rear) |
| * | 14 | 22422000 | Crankshaft |
| | 15 | 23107100 | Cover Gasket |
| * | 16 | 22427000 | Cover Plate |
| | | 71641300 | Glow Plug P3 |
| | | 22826140 | Exhaust Seal Ring |
| | | 71533260 | Carburetor Reducer 6mm w/ "O" Ring (2pcs.) |
| | | 22615000 | "O" Ring (1pc.) |
| | | 71533270 | Carburetor Reducer 7mm w/ "O" Ring (2pcs.) |
| | | 22615000 | "O" Ring (1pc.) |
| | | 22884250 | Dust Cap Set ( 3mm,16mm,18mm) |

*** marked parts are available only for limited period (one year after finishing the production).**

| No. | Code No. | Description |
|---|---|---|
| 1 | 23781400 | Ball Link No.3 |
| 1-1 | 26381501 | Retaining Screw |
| 2 | 23981520 | Dust Cover |
| 3 | 22082340 | Metering Needle Assembly |
| 3-1 | 27881820 | "O" Ring (2pcs.) |
| 4 | 22848210 | Slide Valve |
| 5 | 71533265 | Carburetor Reducer 6.5mm (Red) |
| 5-1 | 22615000 | "O" Ring |
| 6 | 23618197 | Needle Assembly |
| 6-1 | 46066319 | "O" Ring |
| 7 | 22082940 | Needle Holder Assembly |
| 7-1 | 22082950 | Fuel Inlet (No.15) |
| 8 | 22848160 | Throttle Stop Screw |
| 8-1 | 27881820 | "O" Ring |
| 9 | 22082600 | Mixture Control Valve Assembly |
| 9-1 | 46066319 | "O" Ring (L) (2pcs.) |
| 9-2 | 22781800 | "O" Ring (S) (2pcs.) |
| * 10 | 22481102 | Carburetor Body (w/Thermo Insulator) |
| 10-1 | 23781110 | Thermo Insulator |
| 11 | 29015019 | Carburetor Rubber Gasket |
| 12 | 23818190 | Carburetor Sealing Washer |

*** marked parts are available only for limited period (one year after finishing the production).**

**O.S. GENUINE PARTS & ACCESSORIES**

| Code No. | Description |
|---|---|
| 72106440 | M2000SC Exhaust Manifold Assembly |
| 72106130 | T-2060SC WN Tuned Silencer Assembly |
| 72106135 | T-2060SC WN Complete Set |
| 71812000 | 28XZ Hyper Flywheel Set (For MUGEN) |
| 71813000 | 28XZ Hyper Flywheel Set (For KYOSHO) |
| 72413000 | Super Air Cleaner 203 Assembly |
| 71410150 | O.S. SPEED Hex. Wrench Driver 1.5 |
| 71410200 | O.S. SPEED Hex. Wrench Driver 2.0 |
| 71410250 | O.S. SPEED Hex. Wrench Driver 2.5 |
| 71410300 | O.S. SPEED Hex. Wrench Driver 3.0 |
| 71411200 | O.S. SPEED Hex. Ball Wrench Driver 2.0 |
| 71411250 | O.S. SPEED Hex. Ball Wrench Driver 2.5 |
| 71412300 | O.S. SPEED Flat Head Screwdriver 3.0 |
| 71413550 | O.S. SPEED Nut Driver 5.5 |
| 71413600 | O.S. SPEED Nut Driver 6.0 |
| 71413700 | O.S. SPEED Nut Driver 7.0 |

| Code No. | Description |
|---|---|
| 71415300 | O.S. SPEED Clutch Wrench & Adjuster |
| 71415200 | O.S. SPEED Flywheel Key |
| 71415100 | O.S. SPEED Flywheel Puller |
| 71520100 | O.S. SPEED Plug Wrench |
| 73300305 | Dust Cap Set 3mm (5pcs.) |
| 73301612 | Dust Cap Set 16mm (3pcs.) |
| 73301812 | Dust Cap Set 18mm (3pcs.) |

O.S. ENGINE

The specifications are subject to alteration for improvement without notice. 091001